****NEW!****

Now available exclusively from -4H-JENA engineering.

4H JENA ENGINEERING

CONTROS HydroFIA TA

ANALYZER FOR TOTAL ALKALINITY IN SEAWATER

The CONTROS HydroFIA® TA is a flow through system for the determination of the total alkalinity in seawater. It can be used for continuous monitoring during surface water applications as well as for discrete sample measurements. The autonomous TA analyzer can be easily integrated into existing automated measuring systems on voluntary observing ships (VOS) such as FerryBoxes.

The Parameter

Total alkalinity or the buffer capacity is an important sum parameter for many scientific fields of application including ocean acidification and carbonate chemistry research, monitoring of biogeochemical processes, aqua culture / fish farming as well as pore water analysis.

Operating principle

A defined amount of seawater is acidified by injection of a fixed amount of hydrochloric acid (HCl). After acidification the generated CO_2 in the sample is removed by means of a newly designed TOUGH membrane based degassing unit resulting in a open-cell titration. The subsequent pH determination is carried out by means of an indicator dye (Bromocresol green) and VIS absorption spectrometry. Together with salinity and temperature, the resulting pH is directly used for the calculation of total alkalinity.

The analyzer was motivated and supported by initial investigations carried out at the Helmholtz Centre for Ocean Research Kiel (GEOMAR) and the Helmholtz-Zentrum Geesthacht (HZG).

March 2020

FEATURES

- Measurement cycles of less than 10 min
- Robust and proven pH determination using absorption spectrometry
- Single-point titration
- Low sample consumption (<approx. 50 mL)
- Low reagent consumption (100 µL)
- User-friendly reagent cartridges
- Easy one-point calibration by the user
- Minimized biofouling effects due to acidification of the sample
- Autonomous long-term installations
- Second inlet for regular standard measurements

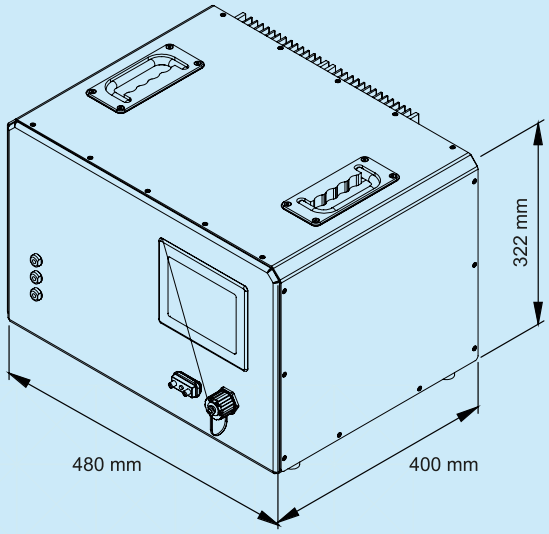

TECHNICAL SPECIFICATIONS

CONTROS HydroFIA TA

Detector	VIS absorption spectrometry
System	Temperature stabilized bench-top system
Field application	Surface water
Dimensions	480 x 400 x 322 mm
Weight	25 kg
Temperature range ambient	+5 °C to +30 °C
Salinity range	20 psu to 37 psu
Measuring range:	
• dynamic	400 µmol kg^{-1}
• standard	2000 µmol kg^{-1} to 2400 µmol kg^{-1}
Resolution	0.1 µmol kg^{-1}
Initial accuracy	±5 µmol kg^{-1}
Precision	±2 µmol kg^{-1}
Measurement cycle	<10 min
Power supply	100 VAC to 240 VAC
Data interface	Ethernet, RS-232

OPTIONS

- Integration into automated measuring systems on VOS
- Cross-flow filters for high turbidity / sediment loaded waters
- Extended working range of 1000 µmol kg^{-1}

Front page image: CONTROS HydroFIA® TA flow-trough system.
Contros HydroFIA® is a registered trademark of -4H-JENA engineering in Germany and other countries.
Specifications subject to change without any further notice.

-4H-JENA engineering GmbH
Muehlenstrasse 126 | 07745 Jena (Germany)
Email: contros@4h-jena.de | Web: www.4h-jena.de

4H JENA ENGINEERING